Job_____ Item No._____

Over 90 Years Of Quality Foodservice Products And Service

HD Gas Counter Hot Plates

MODELS ❑ HDHP1230G ❑ HDHP2430G ❑ HDHP3630G

Model HDHP2430G

SPECIFICATIONS

Wells HD Gas Hot Plates are a perfect match with the Wells HD Gas Griddles and HD Gas Char Broilers.

The HDHP Series Hot Plates are extra heavy-duty and feature cast iron burners and top grates for higher heat, consistent temperatures and quick recovery. Each burner features operator adjustable infinite heat adjustment and On/Off control, adjustable air shutter to control air and optimize combustion. Durable heavy-duty cast iron burners are easily removable for cleaning and provide superior flame characteristics, even heat, higher maximum heat and gentle low heat.

Additional specifications include removable stainless steel front panel for easy access to components, stainless steel side panels, removable drip pan for ease of clean up and adjustable 4” heavy-duty steel legs.

HD Gas Hot Plates ship natural gas and are field convertible to LP Gas – conversion kit included.

STANDARD FEATURES

- ❑ Cast iron top grates
- ❑ Cast iron burners
- ❑ Each burner has adjustable heat control, On/Off control valves and adjustable air shutter for perfect combustion
- ❑ Available in 2, 4, 6 burner models
- ❑ Stainless steel front and sides
- ❑ Easily removable front panel
- ❑ Convertible from NG to LP – conversion kit included
- ❑ Removable drip pan
- ❑ Heavy-duty 4” steel legs

OPTIONS & ACCESSORIES

- ❑ Additional set of 4 adjustable legs #20563

PRODUCT WARRANTY

- ❑ 2 year parts and one year labor warranty

CERTIFICATIONS

NSF c UL us

Sheet No. WELLS_HDHP-07/14

Wells Bloomfield • 10 Sunnen Dr. St. Louis, MO 63143 U.S.A.
Phone : (314) 678-6314 • Fax (314) 781-5445
www.wellsbloomfield.com • Printed in the U.S.A.

NOTE: Specifications are subject to change without notice and are not intended for installation purposes. See installation instructions prior to installing the unit.

Over 90 Years Of Quality Foodservice Products And Service

HD Gas Counter Hot Plates

MODELS ❑ HDHP1230G ❑ HDHP2430G ❑ HDHP3630G

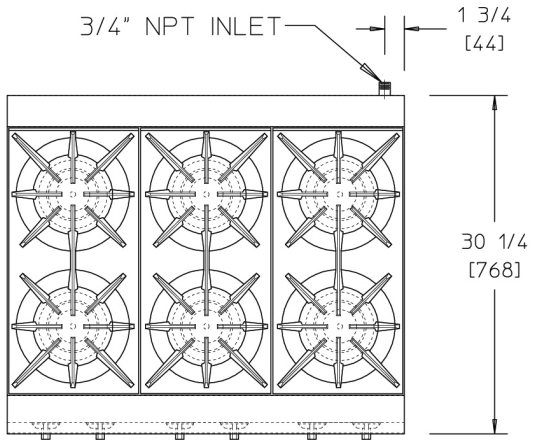

MINIMUM CLEARANCE FROM NON-COMBUSTIBLE SURFACES			
BACK	SIDE	BOTTOM	FRONT
0" (0mm)	0" (0mm)	4" (102mm)	0" (0mm)

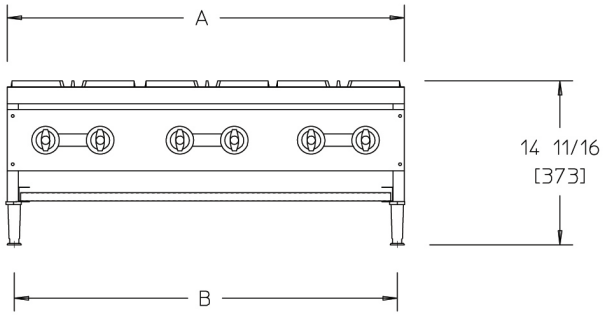

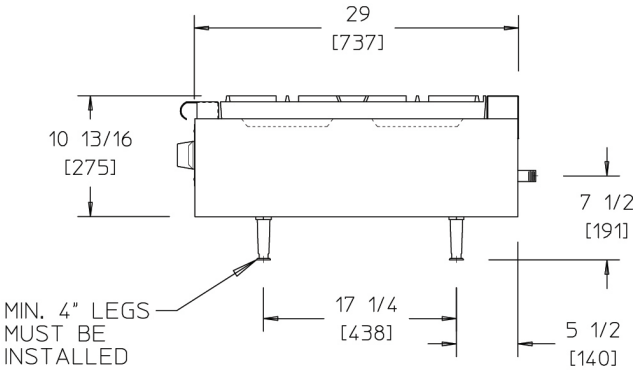

DIMENSIONS: INCH [MM]

NOTE: Specifications are subject to change without notice and are not intended for installation purposes. See installation instructions at www.wellsbloomfield.com prior to installing unit.

Model No.	Number of Controls	Width (A) (MM)	Width (B) (MM)	Depth (MM)	Height (MM) (Includes 4" legs)	BTU Rating		Approx. Weight Shipping lbs. (kg)	Approx. Weight Installed lbs. (kg)
						Natural	L.P.		
						GAS 5" W.C.	GAS 10" W.C.		
HDHP1230G	2	12" (305)	10-5/8" (270)	30-1/4" (768)	14-11/16" (373)	53,000	43,000*	88 (40)	67 (30)
HDHP2430G	4	23-3/4" (603)	22-3/8" (568)	30-1/4" (768)	14-11/16" (373)	106,000	86,000*	225 (102)	133 (60)
HDHP3630G	6	35-1/2" (902)	34-1/4" (870)	30-1/4" (768)	14-11/16" (373)	159,000	129,000*	304 (138)	199 (90)

*PROPANE CONVERSION KIT INCLUDED WITH EACH HOTPLATE

Due to periodic changes in designs, methods, procedures, policies and regulations, the specifications contained in this sheet are subject to change without notice. While Wells exercises good faith efforts to provide information that is accurate, we are not responsible for errors or omissions in information provided or conclusions reached as a result of using the specifications. By using the information provided, the user assumes all risks in connection with such use.

Wells Bloomfield • 10 Sunnen Dr. St. Louis, MO 63143 U.S.A.
Phone : (314) 678-6314 • Fax (314) 781-5445
www.wellsbloomfield.com • Printed in the U.S.A.

NOTE: Specifications are subject to change without notice and are not intended for installation purposes. See installation instructions prior to installing the unit.