Job_____ Item No._____

Over 90 Years Of Quality Foodservice Products And Service

HD Gas Counter Griddles

MODELS	Manual Controls	Thermostatic Controls
	❏ HDG2430G	❏ HDTG2430G
	❏ HDG3630G	❏ HDTG3630G
	❏ HDG4830G	❏ HDTG4830G
	❏ HDG6030G	❏ HDTG6030G

Model HDG2430G

SPECIFICATIONS

Wells HD Gas Countertop Griddles are a perfect match with the Wells HD Gas Hot Plates and HD Gas Char Broilers.

The HDG and HDTG Series griddles are extra heavy-duty and feature a ¾" griddle plate for quick pre-heat, even heat distribution and fast recovery. Manual control models features operator adjustable infinite heat adjustment and on/off control while the thermostatically control models provide precise operator controlled temperatures from 200° - 450°F (93°- 232° C). Each control features an adjustable air shutter to control air and optimize combustion.

Additional specifications include removable stainless steel front panel for easy access to components, stainless steel side panels, stainless splash guard, full-width, front mounted grease trough, removable large capacity drip pan for ease of clean-up and adjustable 4" heavy-duty steel legs.

HD Gas Griddles ship natural gas and are field convertible to LP Gas – conversion kit included.

STANDARD FEATURES

- ❏ Manual or thermostatic controls
- ❏ Each burner has adjustable heat control, on/off control valves and adjustable air shutter for perfect combustion
- ❏ Available in 2, 3, 4, or 5 burner models
- ❏ ¾" griddle plate
- ❏ Stainless steel front, sides and splash guard
- ❏ Easily removable from panel
- ❏ Convertible from NG to LP – conversion kit included
- ❏ Large capacity, removable drip pan
- ❏ Full-width, front mounted grease trough

OPTIONS & ACCESSORIES

- ❏ Additional set of 4 adjustable legs #20563

PRODUCT WARRANTY

- ❏ Two year parts and one year labor warranty

CERTIFICATIONS

NSF c UL us

Sheet No. WELLS_HDG-08/19

Wells • 265 Hobson St. Smithville, TN 37166 U.S.A.
Phone : (800) 264-7827 • Fax (314) 781-5445
www.wells-mfg.com • Printed in the U.S.A.

NOTE: Specifications are subject to change without notice and are not intended for installation purposes. See installation instructions prior to installing the unit.

Over 90 Years Of Quality Foodservice Products And Service

HD Gas Counter Griddles

MODELS

Manual Controls	Thermostatic Controls
❑ HDG2430G	❑ HDTG2430G
❑ HDG3630G	❑ HDTG3630G
❑ HDG4830G	❑ HDTG4830G
❑ HDG6030G	❑ HDTG6030G

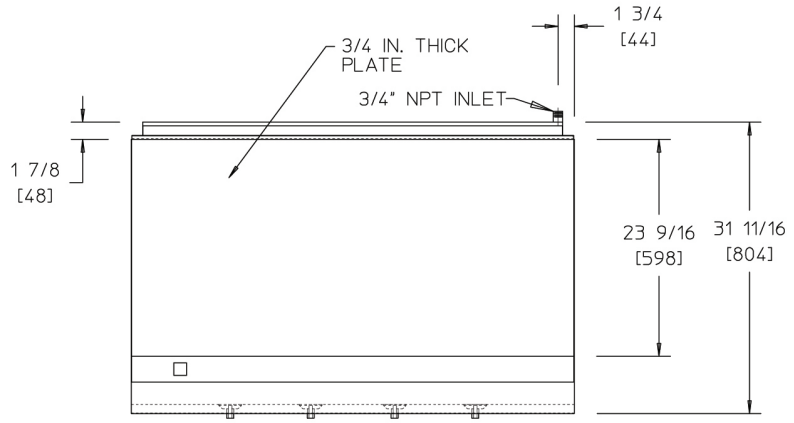

MINIMUM CLEARANCE FROM NON-COMBUSTIBLE SURFACES			
BACK	SIDE	BOTTOM	FRONT
0" (0mm)	0" (0mm)	4" (102mm)	0" (0mm)

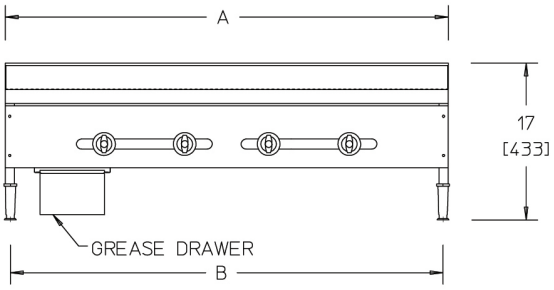

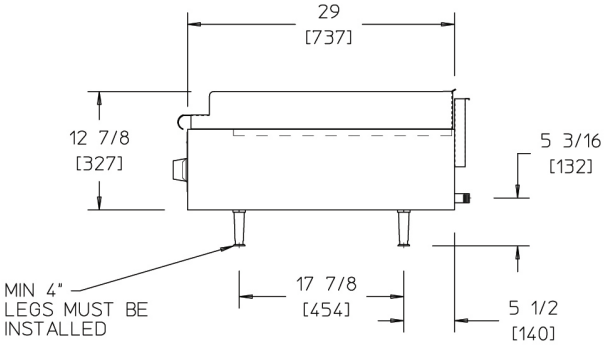

DIMENSIONS: INCH [MM]

NOTE: Specifications are subject to change without notice and are not intended for installation purposes. See installation instructions at www.wellsbloomfield.com prior to installing unit.

Model No.	Number of Controls	Width (A) (MM)	Width (B) (MM)	Depth (MM)	Height (MM) (Includes 4" legs)	BTU Rating Natural GAS 5" W.C.	BTU Rating L.P. GAS 10" W.C.	Approx. Weight Shipping lbs. (kg)	Approx. Weight Installed lbs. (kg)
HDG2430G & HDT2430G	2	24-1/8" (613)	23" (584)	31-11/16" (804)	17" (433)	60,000	60,000*	249 (113)	199 (90)
HDG3630G & HDT3630G	3	36-1/8" (917)	35" (889)	31-11/16" (804)	17" (433)	90,000	80,000*	397 (180)	287 (130)
HDG4830G & HDT4830G	4	48-1/8" (1222)	47" (1194)	31-11/16" (804)	17" (433)	120,000	120,000*	507 (230)	393 (178)
HDG6030G & HDT6030G	5	60-1/8" (1527)	59" (1499)	31-11/16" (804)	17" (433)	150,000	150,000*	640 (290)	530 (240)

*PROPANE CONVERSION KIT INCLUDED WITH EACH HOTPLATE

Due to periodic changes in designs, methods, procedures, policies and regulations, the specifications contained in this sheet are subject to change without notice. While Wells exercises good faith efforts to provide information that is accurate, we are not responsible for errors or omissions in information provided or conclusions reached as a result of using the specifications. By using the information provided, the user assumes all risks in connection with such use.

Wells • 265 Hobson St. Smithville, TN 37166 U.S.A.
Phone : (800) 264-7827 • Fax (314) 781-5445
www.wells-mfg.com • Printed in the U.S.A.

NOTE: Specifications are subject to change without notice and are not intended for installation purposes. See installation instructions prior to installing the unit.